REID & TWINAME
IMPORTERS & DISTRIBUTORS

Call Free 0508 222 999 (AKLD)
Call Free 0508 333 111 (CHCH)
www.retwine.co.nz

Specification Sheet for Spring Bolt CT841

albert Jagger limited

DRAWN BY:	CHECKED BY:
DATE:	DATE:

ISSUE	ALTERATION	DATE	BY

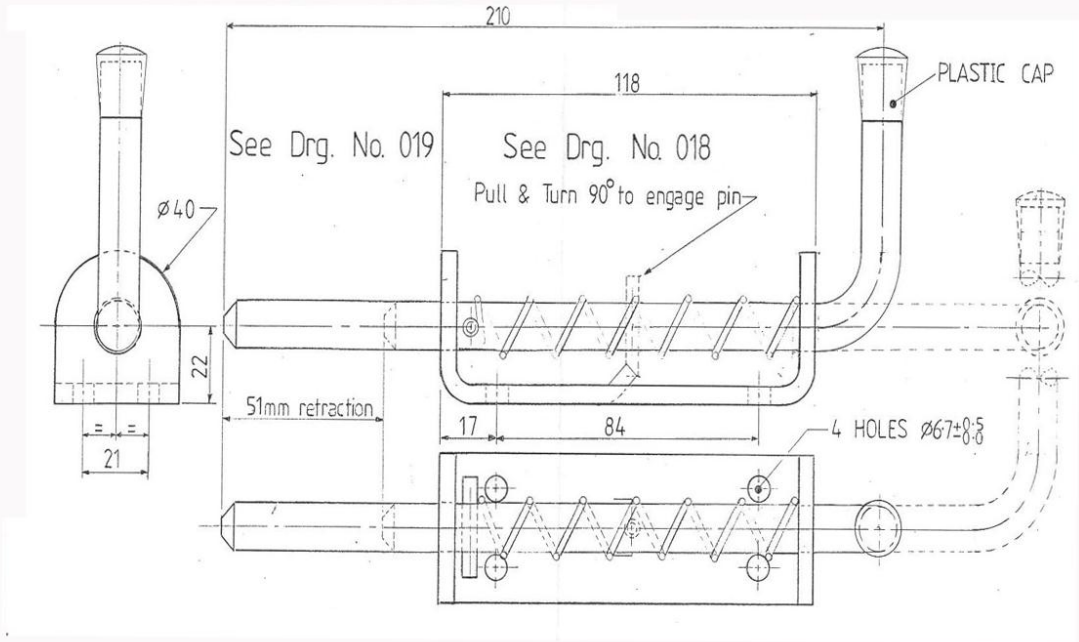

THE COPYRIGHT OF THIS DRAWING BELONGS TO:	FIRST/THIRD ANGLE PROJECTION	MATERIAL:	COMPONENT DESCRIPTION:
ALBERT JAGGER LIMITED CENTAUR WORKS GREEN LANE WALSALL WS2 8HG TEL: 01922-471000 FAX: 01922-648021	**DO NOT SCALE**	Mild Steel 43A	1/2" Spring Bolt Assembly
	TOLERANCES FOR UNTOLERANCED DIMENSIONS	FINISH:	DRAWING NO:
	UP TO 10mm: ± 0.5mm; 10-50mm: ± 1.0mm; 50-200mm: ± 2.0mm; OVER 200mm: ±3.0mm	Zinc Plate Trivalent	0841/001